ECU Code Reading

Items required:

6" of cable, insulated, preferably solid core of 2.5mm^2.
A standard LED (Light Emitting Diode) & 1k-ohm resistor (soldered to the cathode/-ve of the LED) or a standard "12V LED".

Method
1. Open the hood/bonnet and locate the black oblong diagnostic connector behind the battery with "DIAGNOSTIC" printed in raised type on the top.

2. Opening this connector, inside the lid is a schematic of the connections. It is possible to scope O2 sensors and various other systems from here but we will be limited to code reading.
Locate the terminals "TEN" & "GND", notice there is a "B+" terminal nearby which is a 30A +12V feed from the battery and no loose strands of wire must touch it.

3. Ensure the ignition is off, the handbrake is applied and the gearbox is in Neutral or Park.

4. Take a piece of *Insulated* wire, approximately 2.5mm^2, and strip off 1/4"/0.5cm of insulation from each end. Form the wire into a loop about the middle to create a jumper-wire. Solid wire is preferred.

5. Connect this jumper-wire across the connections labled "GND" & "TEN". Ensure no other connectors are connected, and no strands are wandering about if stranded wire is used.

6. Connect the Anode/+ve of the LED+Resistor or 12V-LED to the B+ terminal, and the free resistor end (Cathode/-ve) to the FEN terminal. Ensure that nothing else is connected or accidentally connected as B+ is a 30A 12V supply.

7. Turn the ignition to ON but do not start the car, watch the LED as it flashes out any codes. If it does not flash confirm the connections, if still not flash then you have no codes stored.

8. Codes are flashed out according to the lowest code first, and repeated after a pause of 4 seconds. The format is akin to morse code, in that a short flashes represent 1s and longer flashes 10s. Thus flashes of --- --- - - - - would represent a code of 24 for the (rear) oxygen sensor. Oxygen sensor failures are the most common cause of CELs.

9. To clear codes, disconnect the negative battery terminal for 2 minutes with a door left open or apply the brakes.

10. Turn the Ignition to OFF before removing the jumper wire, and ensure when removing the jumper wire no other connections are touched.

11. If more than one code is present, it can be worth clearing all codes and then checking them again to see which re-occur. It is not uncommon for sporadic codes to appear under certain fault conditions - so requiring them to come back as confirmation is strongly advised.

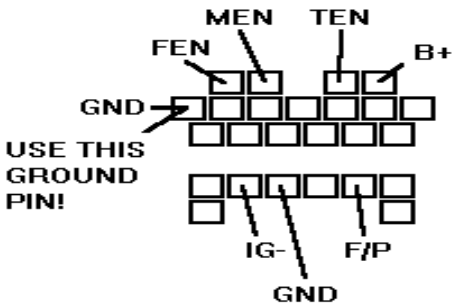

Some of the more common codes

Code	Circuit Diagnosed	Memorized?
02	'NE2' crankshaft position sensor	Yes
03	'G' camshaft position sensor	Yes
04	'NE1' camshaft/crankshaft position sensor	Yes
05	Knock sensor	Yes
08	Volume Air Flow sensor (VAF)	Yes
09	Coolant temperature sensor (CTS)	Yes
10	Intake air temperature sensor (IAT)	Yes
12	Throttle position sensor (TPS)	Yes
14	Barometric pressure sensor	Yes
15	LHO2S inactivation error	Yes
16	Exhaust gas recirculation (EGR) system	Yes
17	LHO2S inversion error	Yes
23	RHO2S inactivation error	Yes
24	RHO2S inversion error	Yes
25	Fuel pressure regulator control solenoid	Yes
26	Canister purge solenoid	No
28	EGR vacuum solenoid	No
29	EGR vent solenoid	No
34	Idle air control (IAC) solenoid	No
41	VRIS #1 solenoid	No
46	VRIS #2 solenoid	No
67	LFAN relay (1993 only)	No
69	ECTF sensor (1993 only)	Yes